CONTROL FITTING

2480.00.31.11.1

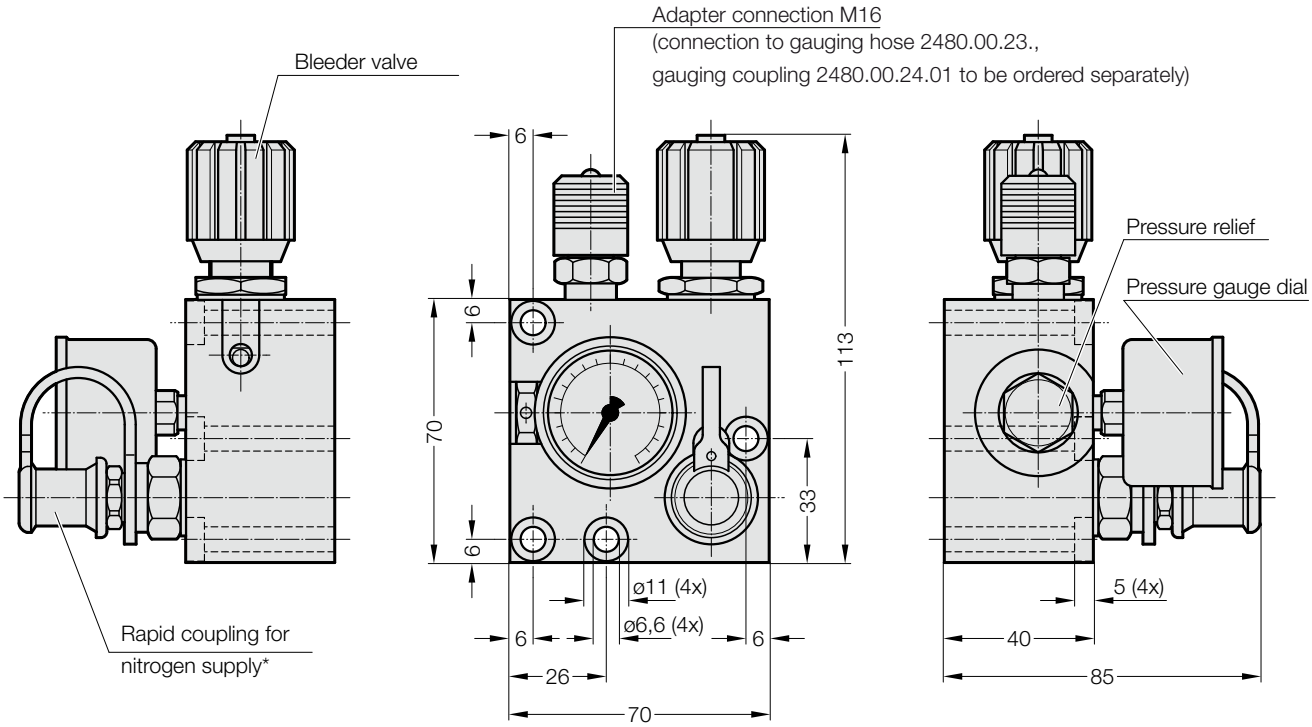

Description:

The control fitting with pressure relief 2480.00.31.11.1 (Faure) is used for the continuous monitoring of the filling pressure of one or more gas pressure springs (one connection G1/8–M16). The pressure check during operation can be carried out by optical monitoring of the manometer display.

Note:

To connect measuring hose system 2480.00.23., remove M16 connection adapter and screw in the measuring coupling with valve 2480.00.24.01 (to be ordered separately).

With a composite arrangement of the gas springs, always remove the valve from the gas spring.

* 2 m long filling hose
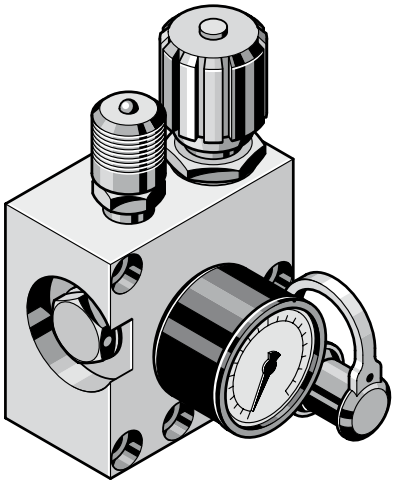
Order no. 2480.00.31.02 to be ordered separately