PRESSURE PLATES, SHOCK ABSORBING

2480.015.

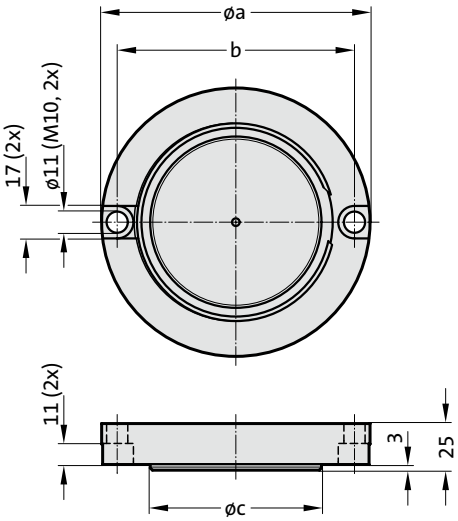

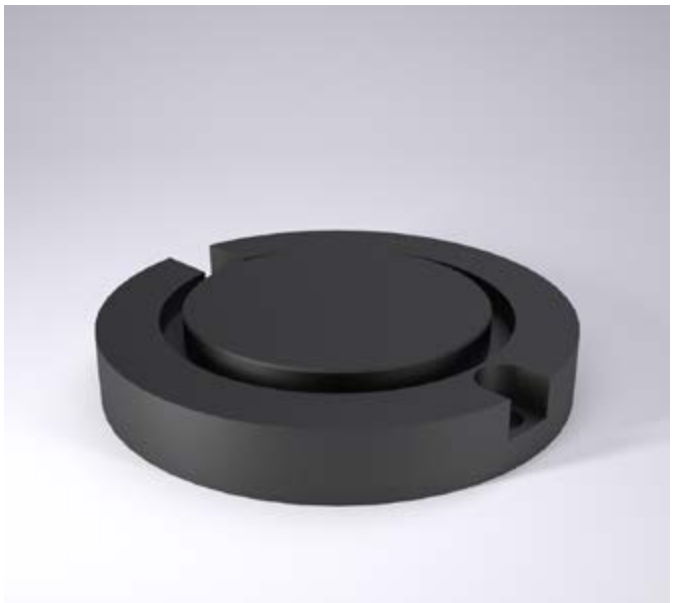

Mounting example

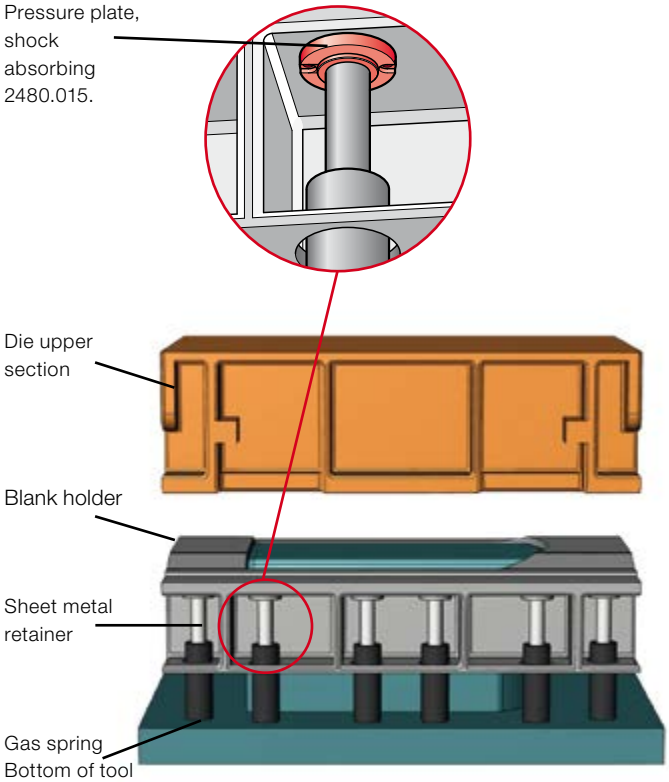

2480.015. Pressure Plates, shock absorbing

Order No.	Gas spring strength	a	b	c
2480.015.01500	750 – 1500	108	91	58
2480.015.05000	> 1500 – 6600	143	126	92
2480.015.10000	> 6600 – 10600	167	150	112

Description:

The shock absorbing pressure plate is designed to minimise the main problems in the metal forming industry.
Factors such as
- extreme shock load
- this means high press maintenance costs
- high noise level
- reduced parts quality

are reduced by a specially developed damping element.
Guidelines for using shock absorbing pressure plates with gas springs:
1. After the maximum shock absorbing travel of 3 mm the gas spring will reach the same initial spring force as it would without the shock absorbing pressure plate.
2. The shock absorbing pressure plate is mounted between the tool and the piston rod of the gas spring.

Material:

Steel, nitride
Polyurethane

Note:

Working temperature:	0 °C to 80 °C
recommended max. strokes/min.:	20
max. pressing speed:	1.6 m/s
max. shock absorbing travel:	3 mm
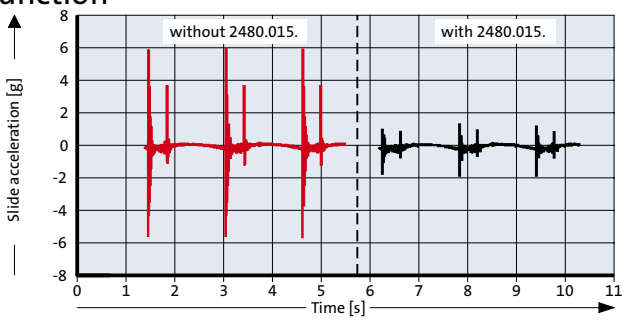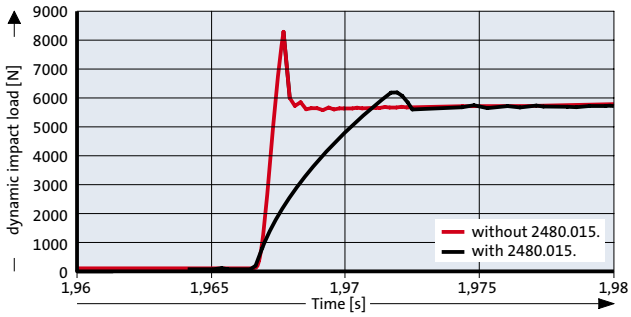
Function